SPECIFICATIONS FOR LCD MODULE

CUSTOMER	
CUSTOMER PART NO.	
AMPIRE PART NO.	AM-19201200H5TZQW-00H
APPROVED BY	
DATE	

☐ **Preliminary Specification**
☑ **Formal Specification**

Approved by	Checked by	Organized by
Patrick	Mark	Tank

*This specification is subject to change without notice.

Marelcom AG Bahnhofstrasse 1 CH-8772 Nidfurn T +41 (0)55 647 30 80 F +41 (0)55 647 30 83 office@marelcom.ch www.marelcom.ch

RECORD OF REVISION

Revision Date	Page	Contents	Editor
2021/06/28	--	New Release	Tank
2021/08/11		Formal Release	Tank

1. FEATURES

This model is a color active matrix thin film transistor (TFT) liquid crystal display (LCD) that uses amorphous silicon TFT as a switching device. This model is composed of a TFT LCD panel, a driving circuit and a back light system. This TFT LCD has a 10.1 (16:10) inch diagonally measured active display area with 1920x1200 resolutions.

- 3.3 V Logic Power
- LVDS (2ch) Interface for 1920 RGB x 1200 resolution
- 16.7M color LVDS interface.
- Green Product (RoHS)
- FFC length 69mm
- New PCB with LED Driver for 40Pin

2. PHYSICAL SPECIFICATIONS

Items	Specifications	Unit
Screen Diagonal	10.1	Inch
Active Area	216.8 (H) x 135.50 (V)	mm
Pixel Format	1920 (H) x RGB x 1200 (V)	-
Pixel Pitch	0.03764 (W) x 0.11292 (H)	mm
Pixel Arrangement	R.G.B. Vertical Stripe	-
Display Mode	Normally Black	-
White Luminance	500 (Typ.)	cd /m2
Contrast Ratio	900: 1 (Typ.)	-
Input Voltage	3.3	V
Outline Dimensions	229.46(H) x 149.1(V) x 8.75(D)	mm
Support Color	16.7M	-

3. ABSOLUTE MAXIMUM RATINGS

ITEM	SYMBOL	VALUES		UNIT	REMARK
		MIN	MAX		
Power Supply Voltage	VDD	-0.3	3.6	V	Ta=25℃
Power Supply for LED Driver	VLED	-0.3	12	V	Ta=25℃
Operation Temperature	T_{OP}	-20	70	℃	
Storage Temperature	T_{ST}	-30	80	℃	

The following values are maximum operation conditions, If exceeded, it may cause faulty operation or damage

4. ELECTRICAL CHARACTERISTICS

4.1 LCD driving

Item		Symbol	Min.	Typ.	Max.	Unit	Note
Power Supply Voltage		V_{DD}	3.0	3.3	3.6	V	GND=0
VDD Current	White Pattern	I_{DD}	--	300	360	mA	(1)
VDD Power Consumption	White Pattern	P_{DD}	--	1.0	1.2	W	
Rush Current		I_{rush}			3.0	A	(2)
Input Logic High Voltage		V_{IH}	2.7		3.3	V	
Input Logic Low Voltage		V_{IL}	0		0.5	V	

Note (1)

The supply voltage is measured and specified at the interface connector of LCM.
The current draw and power consumption specified is for VDD=3.3V, Frame rate f_V=60Hz and Clock frequency = 80MHz. Test Pattern of power supply current

a) Typ : Mosaic 8 x 6 Pattern(L0/L255)

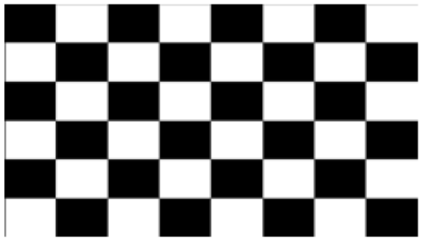

b) Max : skip subPixel(L255)

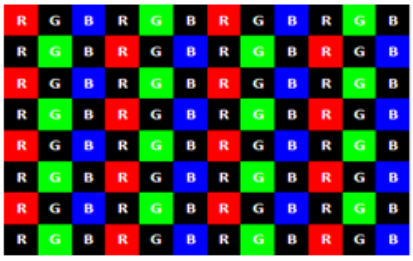

Note (2)

The duration of rush current is about 2ms and rising time of Power Input is 1ms(min)

4.2 Backlight Unit

Item	Symbol	Min.	Typ.	Max.	Unit	Condition
LED Driver Power Voltage	V_{LED}	--	5	12	V	Ta=25℃
LED Driver Current Consumption	I_{LED}		T.B.D		mA	Duty = 100%
Enable Input Voltage	V_{EN}_H	2.4	3.3	5	V	Ta=25℃
	V_{EN}_L	0	--	0.5	V	
PWM Input Voltage	V_{PWM}_H	2.5	3.3	5	V	
	V_{PWM}_L	0	--	0.3	V	
PWM Input Freq.	F_{PWM}	200		25K	Hz	
LED Backlight Voltage	V_{AK}	14	14.3	14.5	V	Ta=25℃
LED Backlight Current	I_{AK}	-	T.B.D	--	mA	
LED Life Time		50k	--	-	Hrs	(2),(3)

Note(1) The backlight system is an edge-lighting type with 40 LED.

Note(2) Brightness to be decreased to 50% of the initial value. Ta=25℃

LED CIRCUIT DIAGRAM:

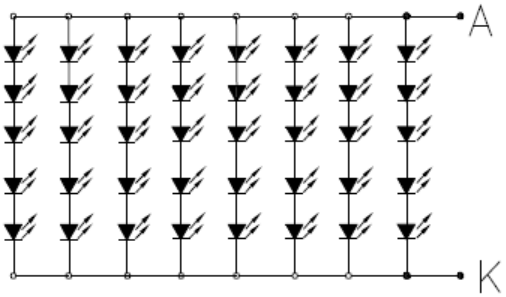

Note(3) When LCM is operated over 40℃ ambient temperature, the I_{AK} should be follow :

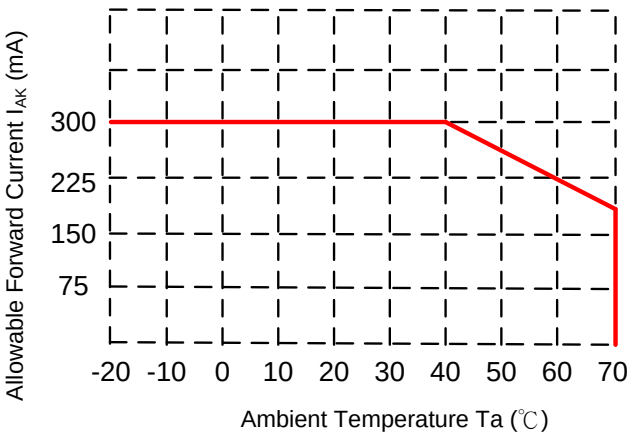

4.3 LVDS Signal Timing Diagram of Interface Signal

Parameter	Symbol	Value			Unit
		Min.	Typ.	Max.	
DCLK Frequency	Fdclk	74.5	77.56	85	MHz
Horizontal display area	Thd		960		DCLK
HSYNC period time	Th	989	1040	1248	DCLK
Horizontal Blank	THB	29	80	288	DCLK
HSYNC pulse width	Thp	2	10	255	DCLK
HSYNC back porch	thbp	3	6	255	DCLK
HSYNC Front porch	thfp	24	64	260	DCLK
Vertical display area	Tvd		1200		H
VSYNC period time	Tv	1243	1243	1560	H
Vertical Blank	TVB	43	43	360	H
VSYNC Pluse width	Tvp	4	4	20	H
VSYNC back porch	Tvbp	20	20	255	H
VSYNC front porch	Tvfp	19	19	260	H
Frequency	fV	-	60	-	Hz

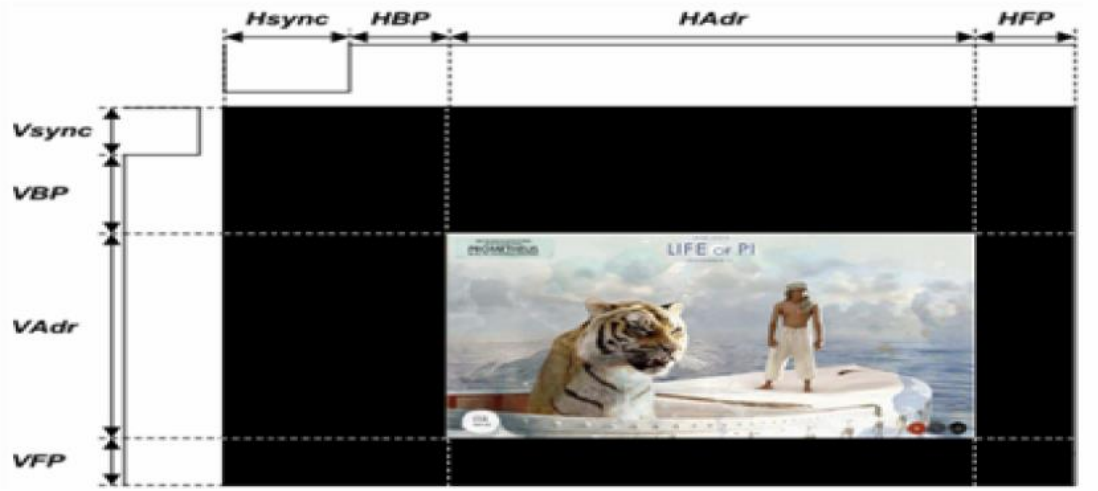

4.4 LVDS AC Timing Specification

Item	Symbol	Min	Typ	Max	Unit	Remark
CLKfrequency	Frcip	20	-	85	MHZ	
CLKIN Period	tRCIP	11.76	-	-	nsec	
Input Data 0	tRIP1	tRCIP/7×(-0.2)	0.0	tRCIP/7×0.2	nsec	
Input Data 1	tRIP0	tRCIP/7×0.8	tRCIP/7	tRCIP/7×1.2	nsec	
Input Data 2	tRIP6	tRCIP/7×1.8	tRCIP/7×2	tRCIP/7×2.2	nsec	
Input Data 3	tRIP5	tRCIP/7×2.8	tRCIP/7×3	tRCIP/7×3.2	nsec	
Input Data 4	tRIP4	tRCIP/7×3.8	tRCIP/7×4	tRCIP/7×4.2	nsec	
Input Data 5	tRIP3	tRCIP/7×4.8	tRCIP/7×5	tRCIP/7×5.2	nsec	
Input Data 6	tRIP2	tRCIP/7×5.8	tRCIP/7×6	tRCIP/7×6.2	nsec	

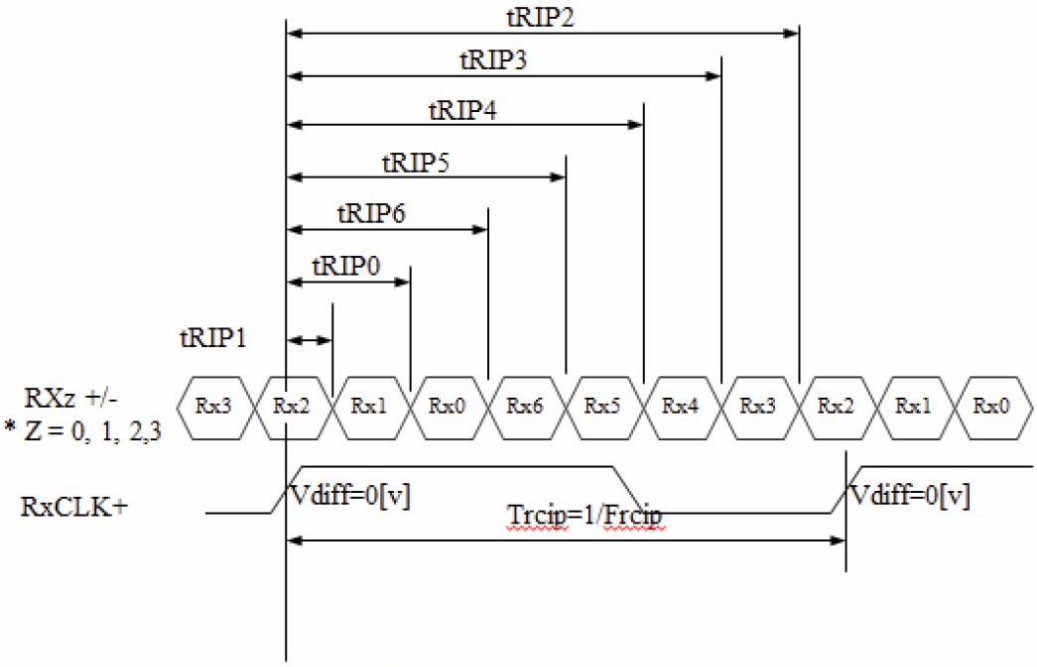

* Vdiff = (RXz+)-(RXz-),.... ,(RXCLK+)-(RXCLK-)

4.4 LVDS DC Timing Specification

Item	Symbol	Min	Typ	Max	Unit	Remark
CLKfrequency	Frcip	20	-	85	MHZ	
CLKIN Period	tRCIP	11.76	-	-	nsec	
Input Data 0	tRIP1	tRCIP/7×(-0.2)	0.0	tRCIP/7×0.2	nsec	
Input Data 1	tRIP0	tRCIP/7×0.8	tRCIP/7	tRCIP/7×1.2	nsec	
Input Data 2	tRIP6	tRCIP/7×1.8	tRCIP/7×2	tRCIP/7×2.2	nsec	
Input Data 3	tRIP5	tRCIP/7×2.8	tRCIP/7×3	tRCIP/7×3.2	nsec	
Input Data 4	tRIP4	tRCIP/7×3.8	tRCIP/7×4	tRCIP/7×4.2	nsec	
Input Data 5	tRIP3	tRCIP/7×4.8	tRCIP/7×5	tRCIP/7×5.2	nsec	
Input Data 6	tRIP2	tRCIP/7×5.8	tRCIP/7×6	tRCIP/7×6.2	nsec	

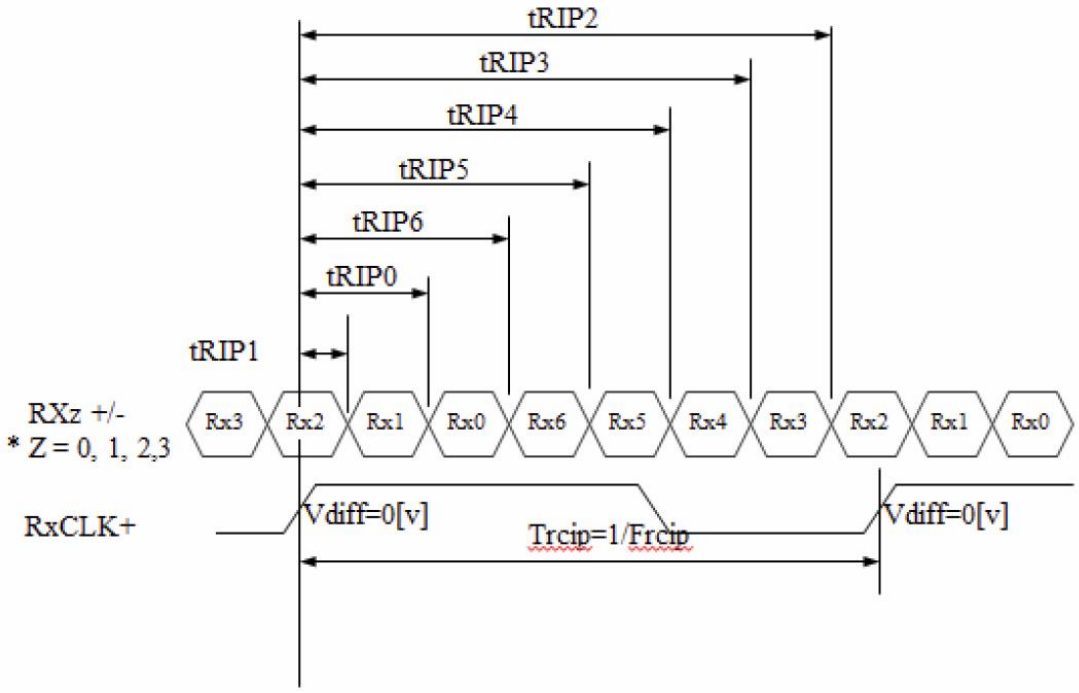

* Vdiff = (RXz+)-(RXz-),.... ,(RXCLK+)-(RXCLK-)

4.6 Power Sequence Specifications

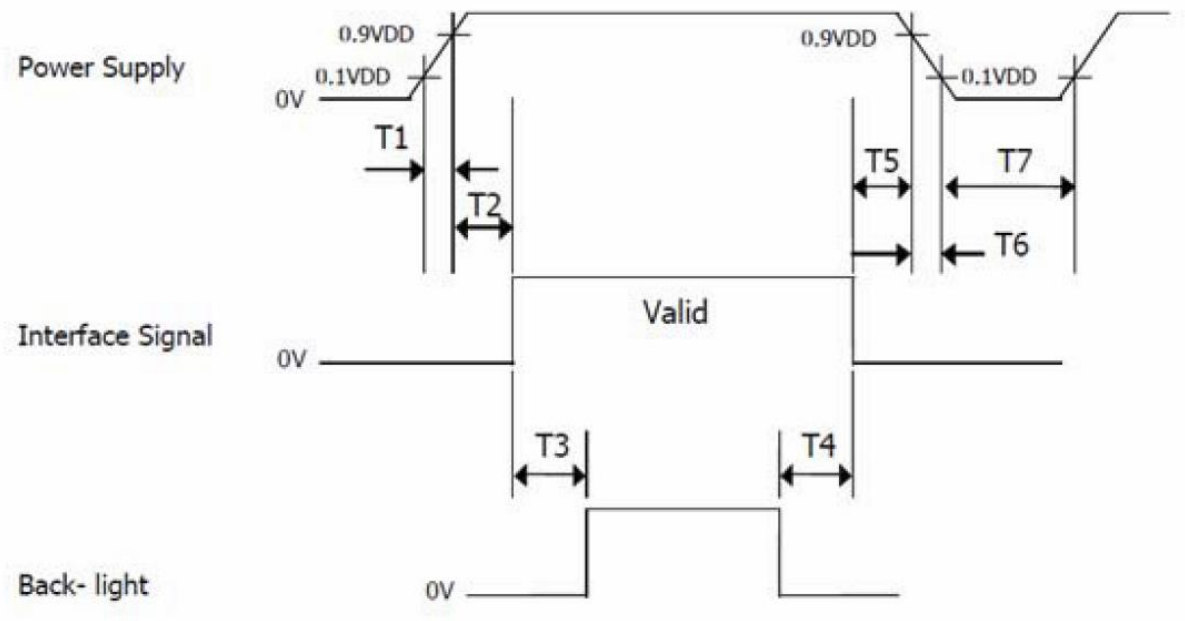

Parameter	Values			Units
	Min	Typ	Max	
T1	0	-	10	ms
T2	0	-	50	ms
T3	200	-	-	ms
T4	500	-	-	ms
T5	0	-	50	ms
T6	0	-	10	ms
T7	500	-	-	ms

5. Optical Specifications

Item	Symbol	Condition	Min.	Typ.	Max.	Unit	Remark
Response Time	TR	Ta=25℃	--	25	--	msec	Note 3
	TF		--		--		
Contrast Ratio	CR	At optimized viewing angle	700	900	-		Note 2
Viewing Angle	Top	CR≧10	80	85	-	deg.	Note1, 2
	Bottom		80	85	-		
	Left		80	85	-		
	Right		80	85	-		
Brightness	Y_L	I_{AK} = T.B.D. Center	400	500	-	cd/m²	Note 4
Brightness Uniformity	BUNI	9 Points	75			%	Note 5
Red chromaticity	XR	Θ=0° Θ=0°	Typ. -0.05	0.644	Typ. +0.05		Note 4,5
	YR			0.344			
Green chromaticity	XG			0.315			
	YG			0.632			
Blue chromaticity	XB			0.157			
	YB			0.054			
White chromaticity	XW			0.285			
	YW			0.327			

Note 1: Definition of Viewing Angle

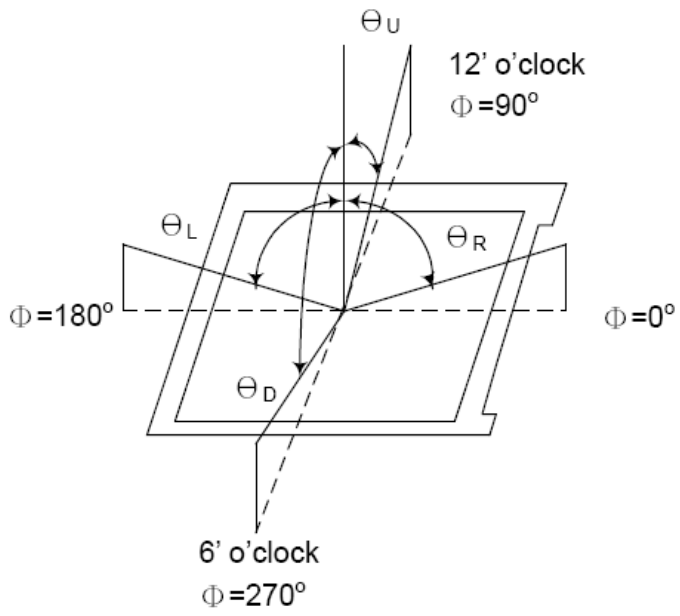

Note 2: Definition of Contrast Ratio (CR)

Measured at the center point of panel

$$\text{Contrast Ratio(CR)} = \frac{Luminance\ measured\ when\ LCD\ on\ the\ \text{"White"}\ state}{Luminance\ measured\ when\ LCD\ on\ the\ \text{"Black"}\ state}$$

Note 3: Definition of Response Time (Tr, Tf)

The response time is defined as the LCD optical switching time interval between "White" state and "Black" state. Rise time (Tr) is the time between photo detector output intensity changed from 90% to 10%. And fall time (Tf) is the time between photo detector output intensity changed from 10% to 90%.

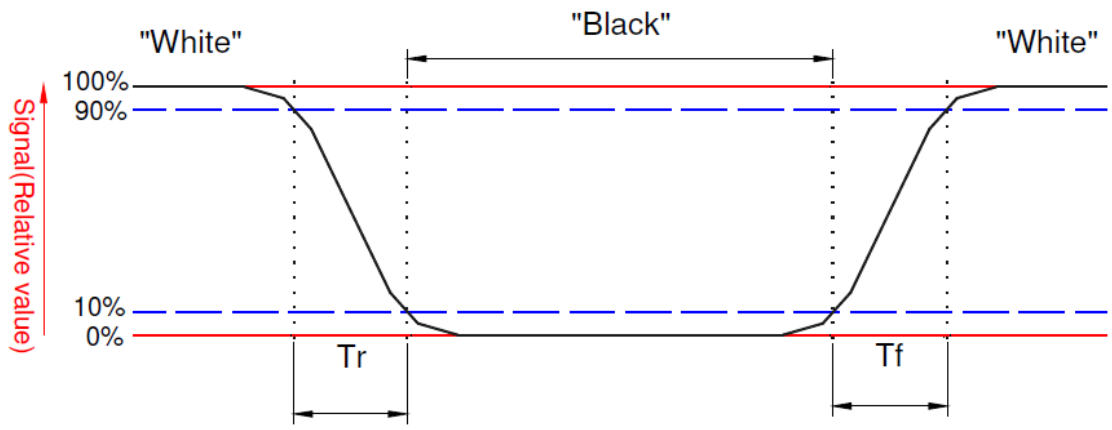

Note 4: Measurement Setup

The LCD module should be stabilized at given temperature(25℃) for 15 minutes to Avoid abrupt temperature change during measuring. In order to stabilize the luminance, the measurement should be executed after lighting backlight for 15 minutes in a windless room.

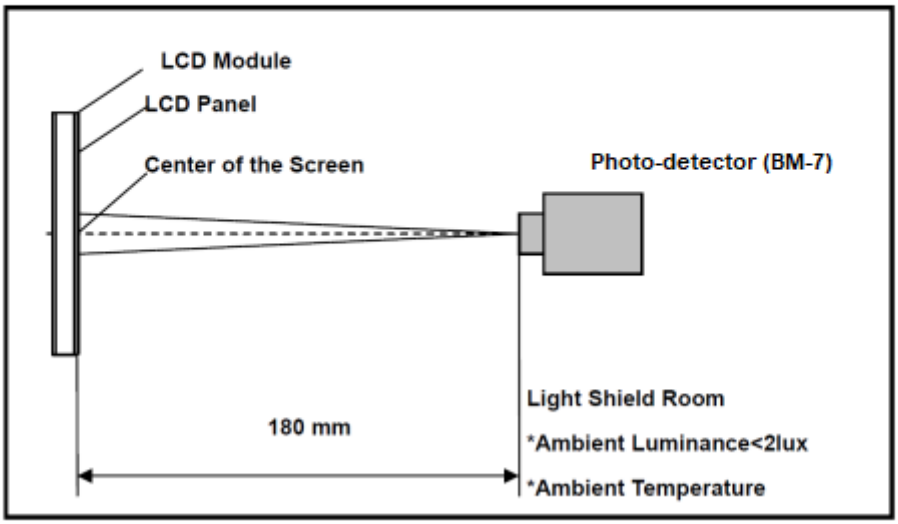

Note 5: Definition of Brightness Uniformity

Active area is divided into 9 measuring areas (Refer to bellow figure). Every measuring point is placed at the center of each measuring area.

$$\text{Luminance Uniformity}(Y_u) = \frac{B_{min}}{B_{max}}$$

L ----- Active area length W ----- Active area width

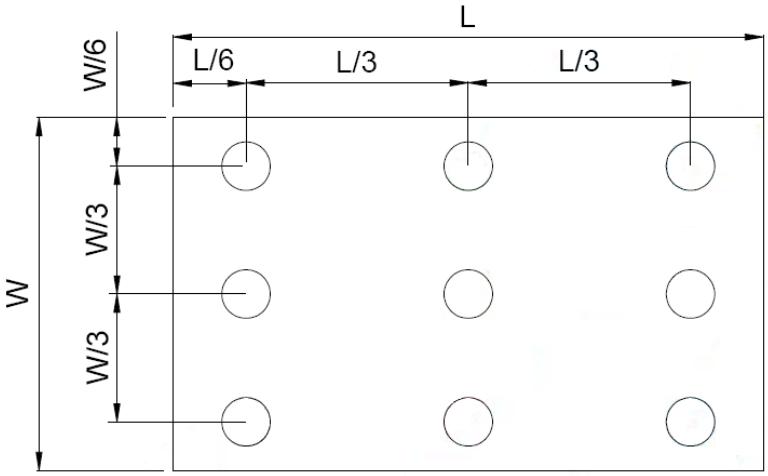

Bmax : The measured maximum luminance of all measurement position.

Bmin : The measured minimum luminance of all measurement position.

6. Interface Connections

Pin #	Signal Name	Description
1	GND	Ground
2	NC	Not Connect
3	VDD	Power Supply, 3.3V (typical)
4	VDD	Power Supply, 3.3V (typical)
5	GND	Ground
6	GND	Ground
7	NC	Not Connect
8	NC	Not Connect
9	GND	Ground
10	IN0-	-LVDS differential data input
11	IN0+	+LVDS differential data input
12	IN1-	-LVDS differential data input
13	IN1+	+LVDS differential data input
14	IN2-	-LVDS differential data input
15	IN2+	+LVDS differential data input
16	CLK-	-LVDS differential data input
17	CLK+	+LVDS differential data input
18	IN3-	-LVDS differential data input
19	IN3+	+LVDS differential data input
20	E_IN0-	-LVDS differential data input
21	E_IN0+	+LVDS differential data input
22	E_IN1-	-LVDS differential data input
23	E_IN1+	+LVDS differential data input
24	E_IN2-	-LVDS differential data input
25	E_IN2+	+LVDS differential data input
26	E_CLK-	-LVDS differential data input
27	E_CLK+	+LVDS differential data input
28	E_IN3-	-LVDS differential data input
29	E_IN3+	+LVDS differential data input
30	GND	Ground
31	GND	Ground

32	VLED	LED Power Supply 5V
33	VLED	LED Power Supply 5V
34	VLED	LED Power Supply 5V
35	VLED	LED Power Supply 5V
36	LED_EN	LED Enable Pin：High→Enable
37	LED_PWM	PWM Signal for LED Dimming Control
38	GND	Ground
39	GND	Ground
40	GND	Ground

Connector: I-PEX 20455-040E-76 or Equivalent.

Mating Connector: I-PEX 20453-040T-03 or Equivalent.

7. Reliability Test

The reliability test items and its conditions are shown below.

Test Item	Test Conditions	Note
High Temperature Operation	70±3°C , t=240 hrs	
Low Temperature Operation	-20±3°C , t=240 hrs	
High Temperature Storage	80±3°C , t=240 hrs	1,2
Low Temperature Storage	-30±3°C , t=240 hrs	1,2
Storage at High Temperature and Humidity	60°C, 90% RH , 240 hrs	1,2
Thermal Shock Test	-20°C (30min) ~ 70°C (30min) , 100 cycles	1,2
Vibration Test (Packing)	Sweep frequency : 10~55~10 Hz/1min Amplitude : 0.75mm Test direction : X.Y.Z/3 axes Duration : 30 min/each axis	2

Note 1 : Condensation of water is not permitted on the module.

Note 2 : The module should be inspected after 1 hour storage in normal conditions (15-35°C , 45-65%RH).

Note 3 : The module shouldn't be tested more than one condition, and all the test conditions are independent.

Note 4 : All the reliability tests should be done without protective film on the module

Definitions of life end point:

- Current drain should be smaller than the specific value.
- Function of the module should be maintained.
- Appearance and display quality should not have degraded noticeably.
- Contrast ratio should be greater than 50% of the initial value.

8. GENERAL PRECAUTION

8.1 Use Restriction

This product is not authorized for use in life supporting systems, aircraft navigation control systems, military systems and any other application where performance failure could be life-threatening or otherwise catastrophic.

8.2 Disassembling or Modification

Do not disassemble or modify the module. It may damage sensitive parts inside LCD module, and may cause scratches or dust on the display. AMPIRE does not warrant the module, if customers disassemble or modify the module.

8.3 Breakage of LCD Panel

(1) If LCD panel is broken and liquid crystal spills out, do not ingest or inhale liquid crystal, and do not contact liquid crystal with skin.
(2) If liquid crystal contacts mouth or eyes, rinse out with water immediately.
(3) If liquid crystal contacts skin or cloths, wash it off immediately with alcohol and rinse thoroughly with water.
(4) Handle carefully with chips of glass that may cause injury, when the glass is broken.

8.4 Electric Shock

(1) Disconnect power supply before handling LCD module.
(2) Do not pull or fold the LED cable.
(3) Do not touch the parts inside LCD modules and the fluorescent LED's connector or cables in order to prevent electric shock.

8.5 Absolute Maximum Ratings and Power Protection Circuit

(1) Do not exceed the absolute maximum rating values, such as the supply voltage variation, input voltage variation, variation in parts' parameters, environmental temperature, etc., otherwise LCD module may be damaged.
(2) Please do not leave LCD module in the environment of high humidity and high temperature for a long time.
(3) It's recommended to employ protection circuit for power supply.

8.6 Operation

(1) Do not touch, push or rub the polarizer with anything harder than HB pencil lead.

(2) Use fingerstalls of soft gloves in order to keep clean display quality, when persons handle the LCD module for incoming inspection or assembly.

(3) When the surface is dusty, please wipe gently with absorbent cotton or other soft material.

(4) Wipe off saliva or water drops as soon as possible. If saliva or water drops contact with polarizer for a long time, they may cause deformation or color fading.

(5) When cleaning the adhesives, please use absorbent cotton wetted with a little petroleum benzene or other adequate solvent.

8.7 Mechanism

(1) Please mount LCD module by using mounting holes arranged in four corners tightly.

8.8 Static Electricity

(1) Protection film must remove very slowly from the surface of LCD module to prevent from electrostatic occurrence.

(2) Because LCD modules use CMOS-IC on circuit board and TFT-LCD panel, it is very weak to electrostatic discharge. Please be careful with electrostatic discharge. Persons who handle the module should be grounded through adequate methods.

8.9 Strong Light Exposure

The module shall not be exposed under strong light such as direct sunlight. Otherwise, display characteristics may be changed.

8.10 Disposal

When disposing LCD module, obey the local environmental regulations.

8.11 Others

Do not keep the LCD at the same display pattern continually. The residual image will happen and it will damage the LCD. Please use screen saver.

9.0 Outline Dimension

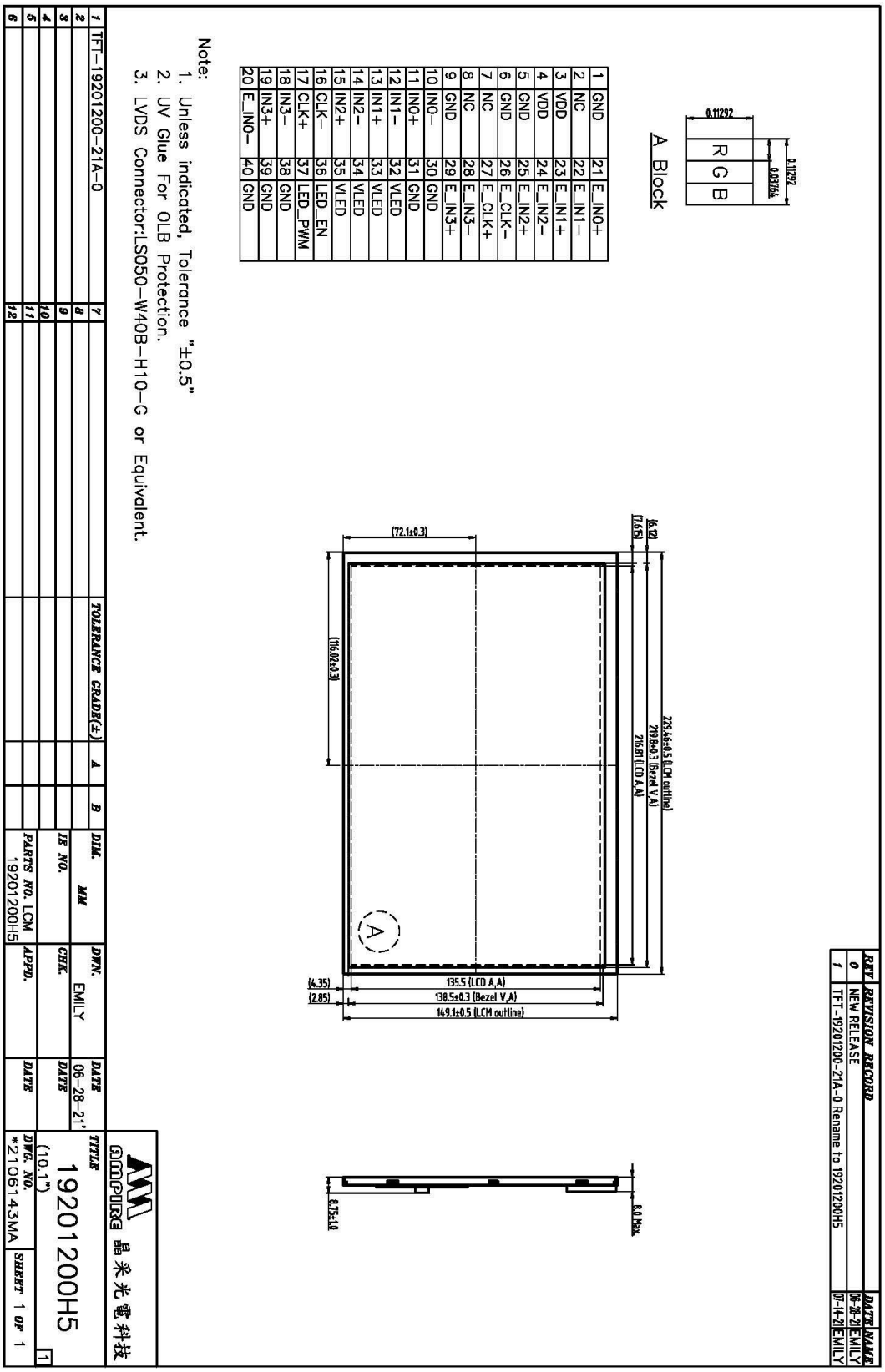

REV	REVISION RECORD	DATE	NAME
0	NEW RELEASE	06-28-21	EMILY
1	TFT-19201200-21A-0 Rename to 19201200H5	07-14-21	EMILY

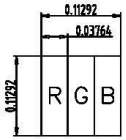

A Block

1	GND	21	E_IN0+
2	NC	22	E_IN1−
3	VDD	23	E_IN1+
4	VDD	24	E_IN2−
5	GND	25	E_IN2+
6	GND	26	E_CLK−
7	NC	27	E_CLK+
8	NC	28	E_IN3−
9	GND	29	E_IN3+
10	IN0−	30	GND
11	IN0+	31	GND
12	IN1−	32	VLED
13	IN1+	33	VLED
14	IN2−	34	VLED
15	IN2+	35	VLED
16	CLK−	36	LED_EN
17	CLK+	37	LED_PWM
18	IN3−	38	GND
19	IN3+	39	GND
20	E_IN0−	40	GND

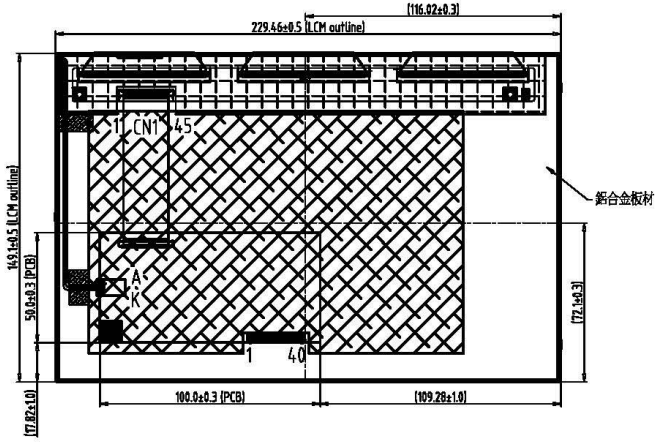

Back View

Note:
1. Unless indicated, Tolerance "±0.5"
2. UV Glue For OLB Protection.
3. LVDS Connector:LS050-W40B-H10-G or Equivalent.

AMPIRE 晶采光電科技

1	TFT-19201200-21A-0	7		TOLERANCE GRADE(±)	A	B	DIM. MM	DWN. EMILY	DATE 06-28-21'	TITLE 19201200H5 (10.1")	1
2		8									
3		9					IE NO.	CHK.	DATE		
4		10									
5		11					PARTS NO. LCM-19201200H5	APPD.	DATE	DWG. NO. *2106144-MA	SHEET 1 OF 1
6		12									