MACH-3.54-800640-AWMN-01
Ver:1.0

TFT (Thin-Film-Transistor) Color Liquid Crystal Display Module

< ◇> Preliminary Specification

< ◆> Finally Specification

CUSTOMER'S APPROVAL	
CUSTOMER :	
SIGNATURE:	DATE:

APPROVED BY	PM REVIEWED	PD REVIEWED	PREPARED BY

Revision History

Revision	Date	Originator	Detail	Remarks
Ver 1.0	20230316		Initial Release	

Table of Contents

1. General Description

The specification is a transmissive type color active matrix liquid crystal display (LCD) which uses amorphous thin film transistor (TFT) as switching devices. This product is composed of a TFT-LCD panel, driver ICs , and a backlight unit.

2. Module Parameter

Features	Details	Unit
Display Size(Diagonal)	3.54”	
LCD type	IPS TFT	
Display Mode	Transmissive /Normally Black	
Resolution	800 RGB x 640	Pixels
View Direction	Full viewing	Best Image
Module Outline	97.7(H) x 83.89(V) x 4.1(T) (Note1)	mm
Active Area	90(H) x72(V)	mm
Pixel Pitch	112.5(H) x 112.5(V)	um
Pixel Arrangement	RGB Vertical stripe	
Display Colors	16.7M	
Interface	24bitRGB +SPI Interface	
With or without the touch panel	Without	
Operating Temperature	**-30～85**	ºC
Storage Temperature	**-30～85**	ºC
Weight	TBD	g

Note 1: Inclusive hooks, posts, FFC/FPC tail etc.

2.1. Outline Drawing

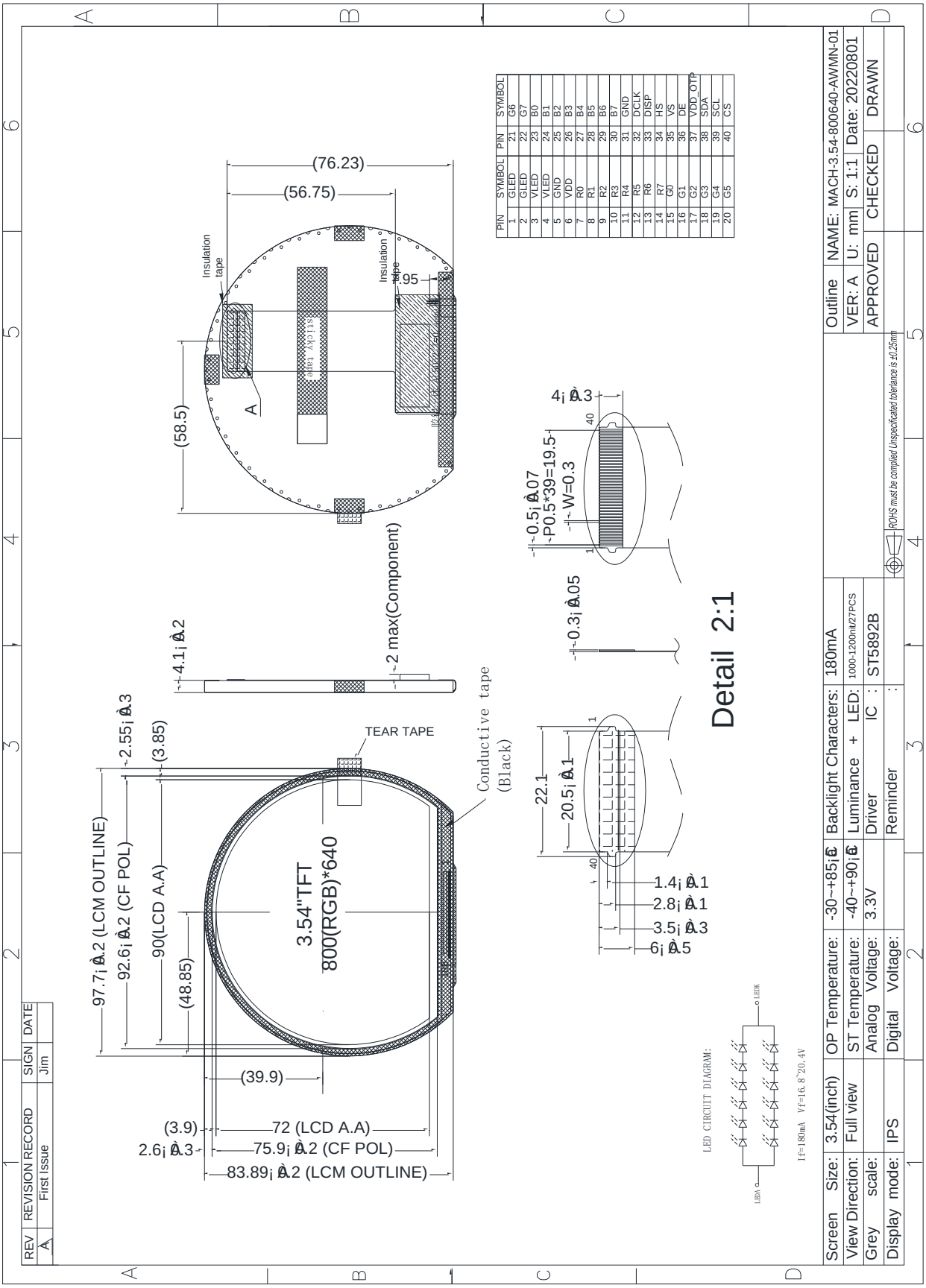

PIN	SYMBOL	PIN	SYMBOL
1	GLED	21	G6
2	GLED	22	G7
3	VLED	23	B0
4	VLED	24	B1
5	GND	25	B2
6	VDD	26	B3
7	R0	27	B4
8	R1	28	B5
9	R2	29	B6
10	R3	30	B7
11	R4	31	GND
12	R5	32	DCLK
13	R6	33	DISP
14	R7	34	HS
15	G0	35	VS
16	G1	36	DE
17	G2	37	VDD_OTP
18	G3	38	SDA
19	G4	39	SCL
20	G5	40	CS

3. Absolute Maximum Ratings

The followings are maximum values which, if exceed, may cause faulty operation or damage to the unit. The operational and non-operational maximum voltage and current values are listed in Table.

V_{SS}=0V, Ta=25ºC

Item	Symbol	Min.	Max.	Unit
Power Supply Voltage	VDD	-0.3	6.0	V
	VDD_MTP	-0.3	12.0	V
Storage temperature	T_{STG}	**-30**	**85**	ºC
Operating temperature	T_{OP}	**-30**	**85**	ºC

Note 1: If Ta below 50ºC, the maximal humidity is 90%RH, if Ta over 50ºC, absolute humidity should be less than 60%RH.

Note 2: The response time will be extremely slow when the operating temperature is around -10℃, and the back ground will become darker at high temperature operating.

Note 3: These range above is maximum value not the actual operating temperature . Actual Operating temperature is no more than 40℃ and temperature refers to the LCM surface temperature ;

Note 4: GWD is not responsible for product problems beyond the use conditions.

Note 5: Temperature and relative humidity range are shown in the figure below.Wet bulb temperature should be 39 ℃ max. and no condensation of water.

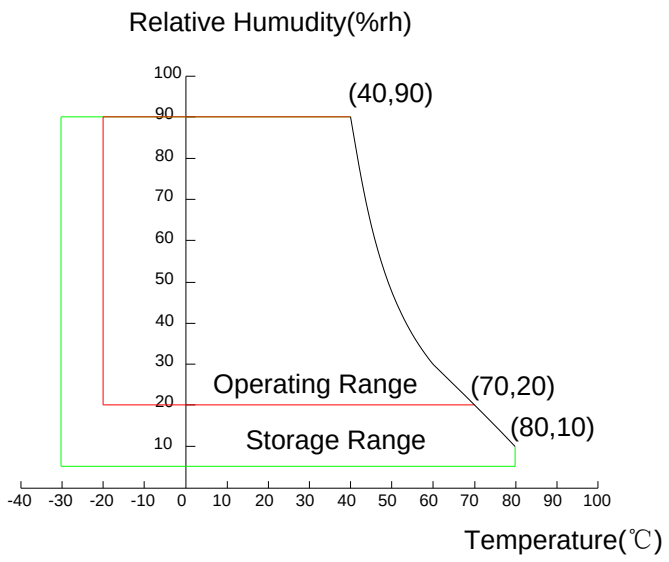

4. DC Characteristics

Item		Symbol	Min.	Typ.	Max.	Unit
Supply Voltage		VDD	3.0	3.3	3.6	V
		VDD_OTP	10.8	11	11.2	V
Current Consumption All white	Logic	I_{VDD}	-	135	-	mA
	Analog					

Note 1: All of the voltage listed above are with respective to GND = 0v

Note 2:Device is subject to be damaged permanently if stresses beyond those absolute maximum rating listed above

5. Backlight Characteristic

5.1. Backlight Characteristic

Item	Symbol	Condition	Min.	Typ.	Max.	Unit
Forward Voltage	V_F	Ta=25 ºC, I_F=20mA/LED	16.8	18.6	20.4	V
Forward Current	I_F	Ta=25 ºC, V_F=3.1V/LED	-	180	-	mA
Power dissipation	P_D	-	-	3348	-	mW
Uniformity	Avg	-	-	(80)	-	%
LED working life(25℃)	-		-	20,000	-	Hrs
Drive method	Constant current					
LED Configuration	12 White LEDs (6LEDs in one string and 2 groups in parallel)					

Note1：LED life time defined as follows: The final brightness is at 50% of original brightness.

The environmental conducted under ambient air flow, at Ta=25±2 ºC,60%RH±5%, I_F=20mA.

5.2. Backlighting circuit

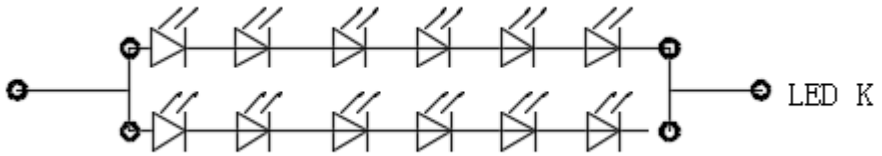

6. Optical Characteristics

6.1. Optical Characteristics

Ta=25ºC, DVDD=3.3V

	Item		Symbol	Condition	Specification			Unit
					Min.	Typ.	Max.	
Backlight On (Transmissive Mode)	Luminance on TFT(I_f =20mA/LED)		Lv	Normally viewing angle θX = φY =0º	**1000**	**1200**	-	cd/m²
	Contrast ratio(See 6.3)		CR		1000	1200	-	
	Response time (See 6.2)		TR+TF		-	25		ms
	Chromaticity Transmissive (See 6.5)	Red	XR		**0.507**	**0.557**	**0.607**	
			YR		**0.276**	**0.326**	**0.376**	
		Green	XG		**0.254**	**0.304**	**0.354**	
			YG		**0.557**	**0.607**	**0.657**	
		Blue	XB		**0.094**	**0.144**	**0.194**	
			YB		**0.010**	**0.060**	**0.110**	
		White	XW		0.298	**0.348**	0.398	
			YW		0.352	**0.402**	0.452	
	Viewing Angle (See 6.4)	Horizontal	θX+	Center CR≥10	80	85		Deg.
			θX-		80	85		
		Vertical	φY+		80	85		
			φY-		80	85		
	NTSC Ratio(Gamut)				65	70		

6.2. Definition of Response Time

6.2.1. Normally Black Type (Negative)

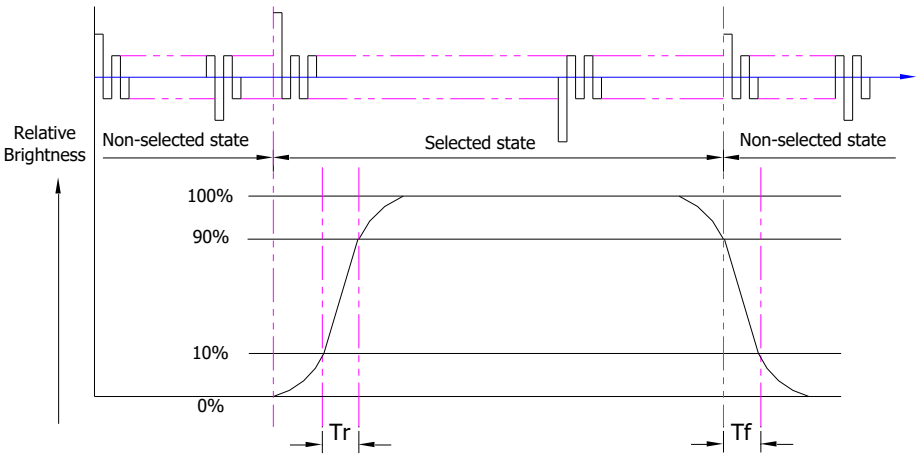

Tr is the time it takes to change form non-selected stage with relative luminance 10% to

selected state with relative luminance 90%;

Tf is the time it takes to change from selected state with relative luminance 90% to non-selected state with relative luminance 10%.

Note: Measuring machine: LCD-5100

6.2.2. Normally White Type (Positive)

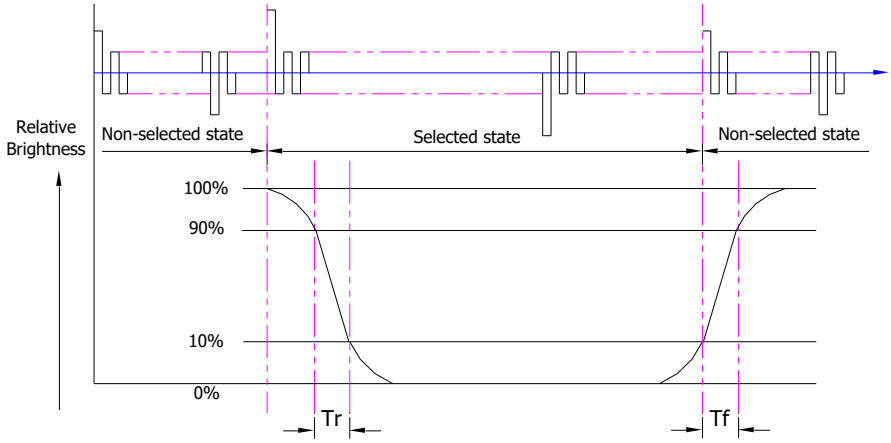

Tr is the time it takes to change form non-selected stage with relative luminance 90% to selected state with relative luminance 10%;

Tf is the time it takes to change from selected state with relative luminance 10% to non-selected state with relative luminance 90%;

Note: Measuring machine: LCD-5100 or EQUI

6.3. Definition of Contrast Ratio

Contrast is measured perpendicular to display surface in reflective and transmissive mode. The measurement condition is:

Measuring Equipment	Eldim or Equivalent
Measuring Point Diameter	3mm//1mm
Measuring Point Location	Active Area centre point
Test pattern	A: All Pixels white
	B: All Pixel black
Contrast setting	Maximum

Definitions: CR (Contrast) = Luminance of White Pixel / Luminance of Black Pixel

6.4. Definition of Viewing Angles

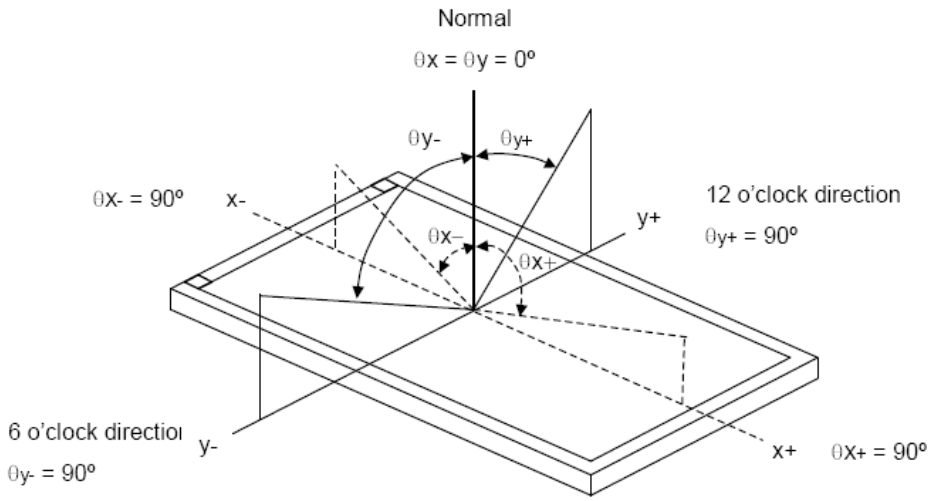

Measuring machine: LCD-5100 or EQUI

6.5. Definition of Color Appearance

R,G,B and W are defined by (x, y) on the IE chromaticity diagram

NTSC=area of RGB triangle/area of NTSC triangleX100%

Measuring picture: Red, Green, Blue and White (Measuring machine: BM-7)

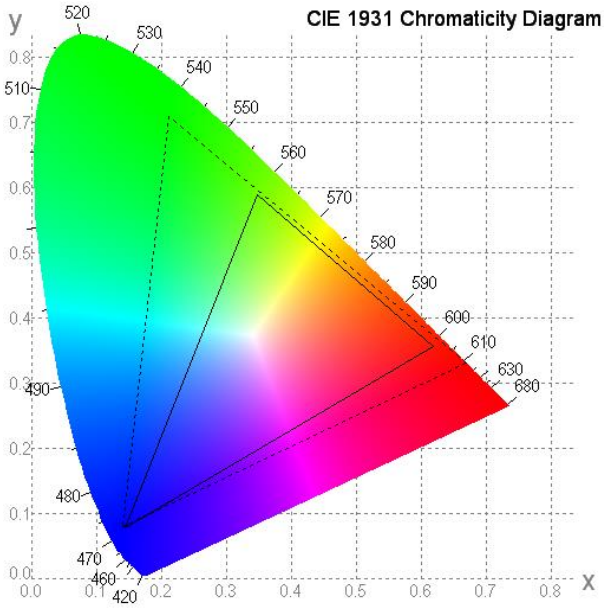

6.6. Definition of Surface Luminance, Uniformity and Transmittance

Using the transmissive mode measurement approach, measure the white screen luminance of the display panel and backlight.

6.6.1. Surface Luminance: L_V = average (L_{P1}:L_{P9})

6.6.2. Uniformity = Minimal (L_{P1}:L_{P9}) / Maximal (L_{P1}:L_{P9}) * 100%

6.6.3. Transmittance = L_V on LCD / L_V on Backlight * 100%

Note: Measuring machine: BM-7

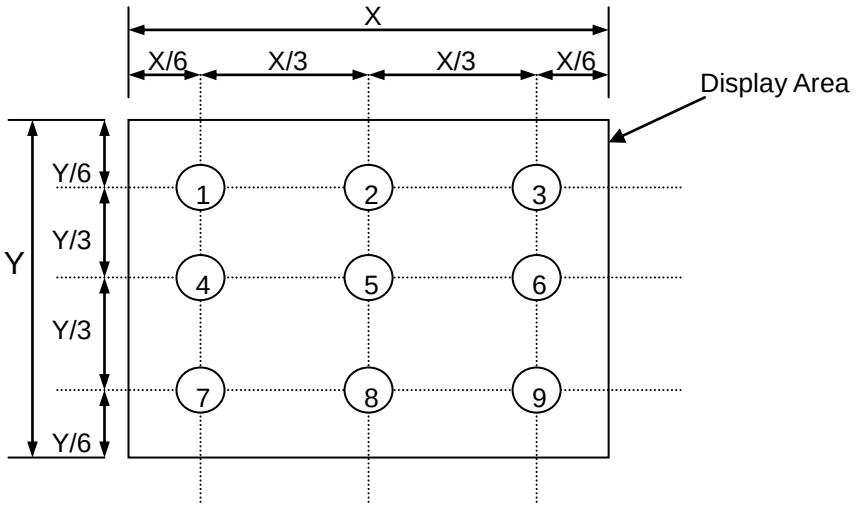

7. Block Diagram and Power Supply

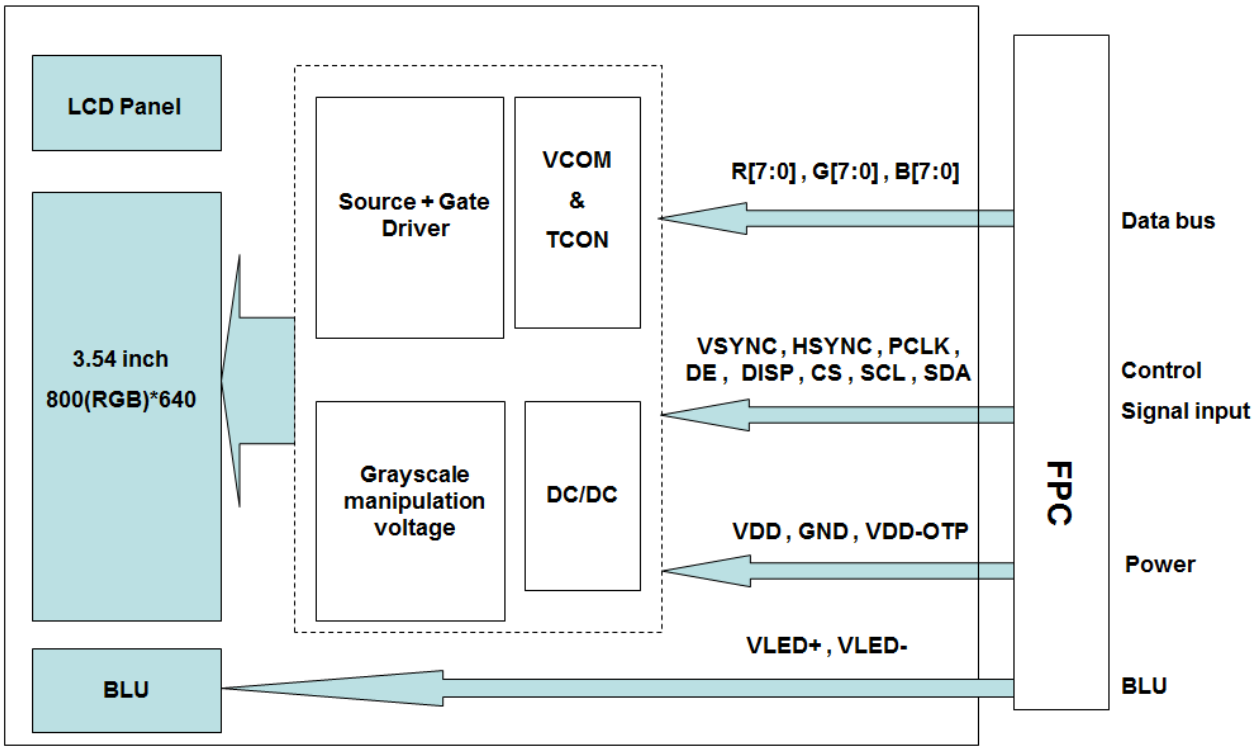

8. Interface Pins Definition

No.	Symbol	Function	Remark
1	GLED	Power for LED Backight (Cathode)	
2	GLED	Power for LED Backight (Cathode)	
3	VLED	Power for LED Backight (Anode)	
4	VLED	Power for LED Backight (Anode)	
5	GND	Ground	
6	VDD	Power supply	
7	R0	Red data (LSB).	
8	R1	Red data.	
9	R2	Red data.	
10	R3	Red data.	
11	R4	Red data.	
12	R5	Red data.	
13	R6	Red data.	
14	R7	Red data (MSB).	
15	G0	Green data (LSB).	
16	G1	Green data.	
17	G2	Green data.	
18	G3	Green data.	
19	G4	Green data.	
20	G5	Green data.	
21	G6	Green data.	

22	G7	Green data (MSB).	
23	B0	Blue data (LSB).	
24	B1	Blue data.	
25	B2	Blue data.	
26	B3	Blue data.	
27	B4	Blue data.	
28	B5	Blue data.	
29	B6	Blue data.	
30	B7	Blue data (MSB).	
31	GND	Ground.	
32	PCLK	Clock for input data.	
33	DISP	Display on/off.	
34	HSYNC	Horizontal sync signal.	
35	VSYNC	Vertical sync signal.	
36	DE	Data enable.	
37	VDD_OTP	LCD otp memory	
38	SDA	Serial data input for SPI intreface	
39	SCL	Clock signal input for SPI intreface	
40	CS	Chip select signal for SPI intreface	

9. AC Characteristics

9.1. SPI AC Characteristics

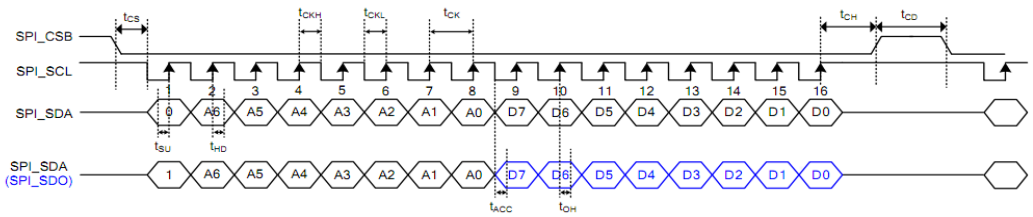

VSSI = VSSRX = VSSP = 0V, VDDI = VDDP= VDDRX = 3.0 ~ 3.3V, Ta Temperature

Item	Signal	Symbol	Condition	Min.	Max.	Unit
Serial clock period (Write)	SPI_SCL	t_{CK}	STBYB='0'	2500	—	ns
			STBYB='1'	60	—	
Serial clock period (Read)			STBYB='0'	10000	—	
			STBYB='1'	1000	—	
SPI_SCL "H" pulse width (Write)		t_{CKH}	STBYB='0'	1250	—	
			STBYB='1'	30	—	
SPI_SCL "H" pulse width (Read)			STBYB='0'	2000	—	
			STBYB='1'	100	—	
SPI_SCL "L" pulse width (Write)		t_{CKL}	STBYB='0'	1250	—	
			STBYB='1'	30	—	
SPI_SCL "L" pulse width (Read)			STBYB='0'	3000	—	
			STBYB='1'	100	—	
Write data setup time	SPI_SDA (Write)	t_{SU}		12	—	
Write data hold time		t_{HD}		12	—	
Read data access time	SPI_SDA (Read)	t_{ACC}	STBYB='0'	—	2500	
			STBYB='1'	—	100	
Read data output disable time		t_{OH}		20	100	
SPI_CSB-SCL time	SPI_CSB	t_{CS}		20	—	
SPI_CSB-SCL time		t_{CH}		100	—	
SPI_CSB "H" pulse width		t_{CD}		50	—	

Note:
1. The input signal rise and fall time (tr, tf) are specified at 15ns or less.
2. All timing is specified using 20% and 80% of VDDI as the standard.

9.2. CMOS AC Timing

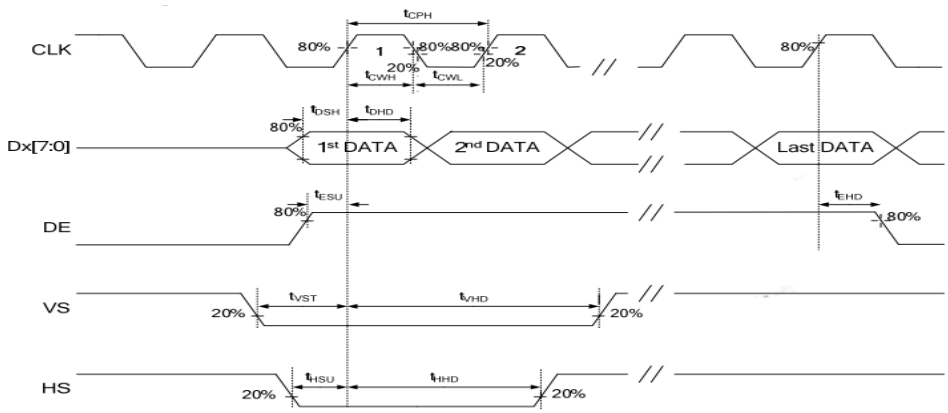

VSSI = VSSRX = VSSP = 0V, VDDI = VDDP= VDDRX = 3.0 ~ 3.3V, Ta Temperature

Item	Signal	Symbol	Condition	Rating		Unit
				Min.	Max.	
CLK cycle time	CLK	t_{CPH}		25	200	ns
CLK pulse high duty		t_{CWH}		40	60	%
CLK pulse low duty		t_{CWL}		40	60	
VS setup time	VS	t_{VST}		4	-	ns
VS hold time		t_{VHD}		2	-	
HS setup time	HS	t_{HST}		4	-	
HS hold time		t_{HHD}		2	-	
Data setup time	Dx[7:0]	t_{DSH}		4	-	
Date hold time		t_{DHD}		2	-	
DE setup time	DE	t_{ESU}		4	-	
DE hold time		t_{EHD}		2	-	

9.3. Hardware Reset Timing

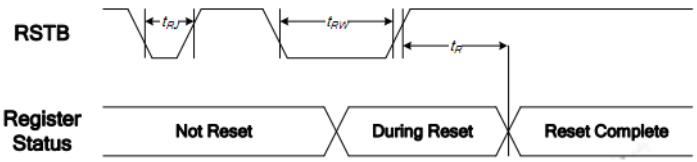

VSSI = VSSRX = VSSP = 0V, VDDI = VDDP= VDDRX = 3.0 ~ 3.3V, Ta Temperature

Item	Signal	Symbol	Condition	Rating		Unit
				Min.	Max.	
Reset time	RSTB	t_R		—	5	us
Reset "L" pulse width		t_{RW}		15	—	
Reset rejection		t_{RJ}		—	5	
Reset rejection (for noise spike)		t_{RJS}		—	10	ns

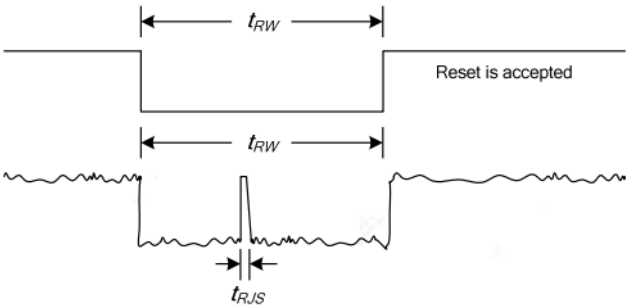

Note:

1. For MTP related operation, it takes 50ms at least for MTP Registers to load MTP contents.
   Do not use any MTP related command during this period.
2. When the system issues a RSTB low pulse, the reset procedure of IC will start if the low pulse is longer than t_{RW} specified above. If the low pulse is less than t_{RJ} specified above, the reset procedure of IC will not start.
   If the low pulse is longer than t_{RJ} and less than t_{RW}, the reset procedure of IC is not guaranteed.

10. Quality Assurance

10.1. Purpose

This standard for Quality Assurance assures the quality of LCD module products supplied to customer.

10.2. Standard for Quality Test

10.2.1. Sampling Plan:

GB2828.1-2012

Single sampling, general inspection level II

10.2.2. Sampling Criteria:

Visual inspection: AQL 1.5%

Electrical functional: AQL 0.65%.

10.2.3. Reliability Test:

Detailed requirement refer to Reliability Test Specification.

10.3. Nonconforming Analysis & Disposition

10.3.1. Nonconforming analysis:

10.3.1.1. Customer should provide overall information of non-conforming sample for their complaints.

10.3.1.2. After receipt of detailed information from customer, the analysis of nonconforming parts usually should be finished in one week.

10.3.1.3. If cannot finish the analysis on time, customer will be notified with the progress status.

10.3.2. Disposition of nonconforming:

10.3.2.1. Non-conforming product over PPM level will be replaced.

10.3.2.2. The cause of non-conformance will be analyzed. Corrective action will be discussed and implemented.

10.4. Agreement Items

Shall negotiate with customer if the following situation occurs:

10.4.1. There is any discrepancy in standard of quality assurance.

10.4.2. Additional requirement to be added in product specification.

10.4.3. Any other special problem.

10.5. Standard of the Product Visual Inspection

10.5.1. Appearance inspection:

10.5.1.1. The inspection must be under illumination about 1000 – 1500 lx, and the distance of view must be at 30cm ± 2cm.

10.5.1.2. The viewing angle should be 45° from the vertical line without reflection light or follows customer's viewing angle specifications.

10.5.1.3. Definition of area: A Zone: Active Area, B Zone: Viewing Area,

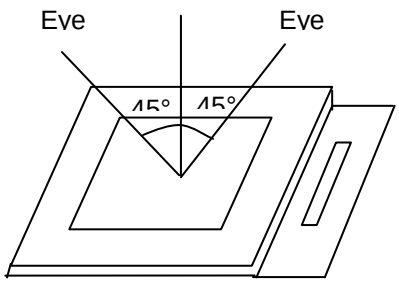

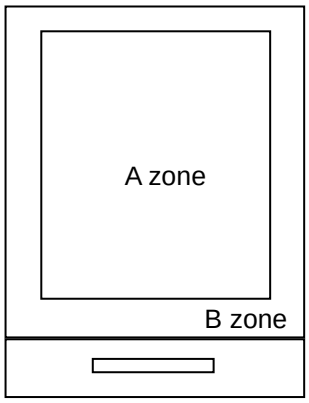

10.5.2. Basic principle:

10.5.2.1. A set of sample to indicate the limit of acceptable quality level must be discussed by both us and customer when there is any dispute happened.

10.5.2.2. New item must be added on time when it is necessary.

10.6. Inspection Specification

These inspection standards shall be applied to LCD Module supplied by INNOLUX Optoelectronics Corporation. This model is only used in CE product, if it is used in other product applications; it still adopts this copy of specification. If there are any other product applications such as handwriting recognition, Industrial use, Medical use, Aerospace usage and so on, the specifications should be negotiated separately.

01 Definition of dot defect induced from the panel inside

a) Bright dot：Dots appear bright and unchanged in size in which LCD panel is displaying under black pattern.

b) Dark dot：Dots appear dark and unchanged in size in which LCD panel is displaying under pure red, green, blue picture.

c) 2 dot adjacent = 1 pair = 2 dots

Picture:

2 dot adjacent　2 dot adjacent　2 dot adjacent (vertical)　2 dot adjacent(slant)

No.	Display Inspection		
02	Items		Criteria (Unit: mm)
	Bright dot	Random	N ≦ 1
		2 dots adjacent	N ≦ 0
		3 dots adjacent	N ≦ 0
	Dark dot	Random	N ≦ 2
		2 dots adjacent	N ≦ 0
		3 dots adjacent	N ≦ 0
	Total bright dot and dark dot		N ≦ 2
	Distance	Minimum Distance Between dark dots Minimum Distance Between dark and bright dots	5mm
Tiny bright dot			visible through 6% ND filter D≦0.1mm，Ignore 0.1mm＜D≦0.3mm，N≦2 Distance≧5mmm
Display failure（V-line/Cross line etc)			
Mura/Waving/Hot spot	Not visible through 6% ND filter in 50% gray or judge by limit sample if necessary		

*Note: Defect which is on the Black Matrix (outside of Active Area) are not considered as a defect.

No.	Appearance & Display inspection	
	Items	**Criteria (Unit: mm)**
03	Foreign Black/White/Bright Spot (Display & Appearance)	D≦0.1mm, Ignore, 0.1mm＜D≦0.3mm, N≦2 Distance≧5mm,It is shown in Fig. 2.
	Foreign Black/White/Bright Line (Display & Appearance)	W≦0.03 mm，Ignore 0.03＜W≦0.05 mm L≦3.0 mm，N≦3 It is shown in Fig. 3.
	Polarizer Dent/Air Bubble	D≦0.1mm, Ignore 0.1mm＜D≦0.3mm, N≦2 Distance≧5mm
	Polarizer Scratches	W≦0.03 mm, Ignore 0.03＜W≦0.05 mm L≦3.0 mm, N≦3

Notes: If any specific defect is not included in the above defect table, this defect should be judged by INX/ODM/Brand customer discussion.

1. W：Width
2. L：Length
3. D：Average Diameter
4. N：Count

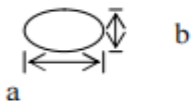

D=(a+b)/2

Fig. 2

W: width, L：length

Fig. 3

No.	Item	Criteria (Unit: mm)
04	Glass Crack (Minor defect)	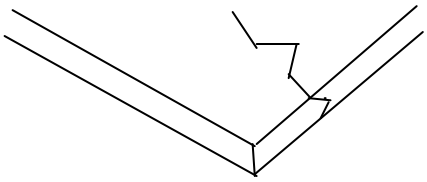 Crack is potential to enlarge, any type is not allowed.
05	Glass Chipping Pad Area: (Minor defect) 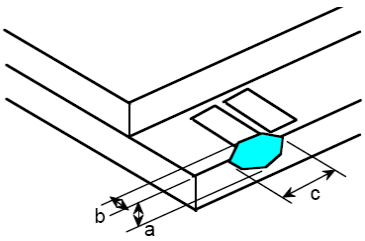	Length and Width / Acc. Qty c > 3.0, b< 1.0 / 1 c< 3.0, b< 1.0 / 3 a<Glass Thickness

<table>
<tr><td>06</td><td>Glass Chipping Rear of Pad Area:
(Minor defect)
 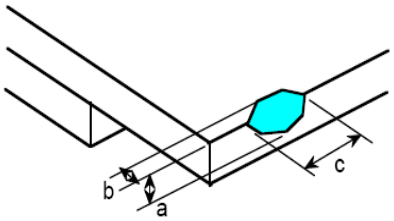
</td><td><table><tr><th>Length and Width</th><th>Acc. Qty</th></tr><tr><td>c > 3.0, b< 1.0</td><td>1</td></tr><tr><td>c< 3.0, b< 1.0</td><td>2</td></tr><tr><td>c< 3.0, b< 0.5</td><td>4</td></tr><tr><td colspan="2">a<Glass Thickness</td></tr></table></td></tr>
<tr><td>07</td><td>Glass Chipping Except Pad Area:
(Minor defect)
 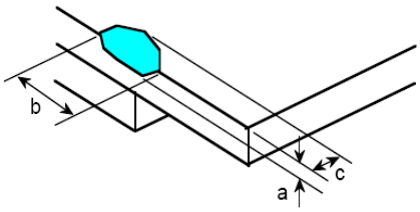
</td><td><table><tr><th>Length and Width</th><th>Acc. Qty</th></tr><tr><td>c > 3.0, b< 1.0</td><td>1</td></tr><tr><td>c< 3.0, b< 1.0</td><td>2</td></tr><tr><td>c< 3.0, b< 0.5</td><td>4</td></tr><tr><td colspan="2">a<Glass Thickness</td></tr></table></td></tr>
<tr><td>08</td><td>Glass Corner Chipping:
(Minor defect)
 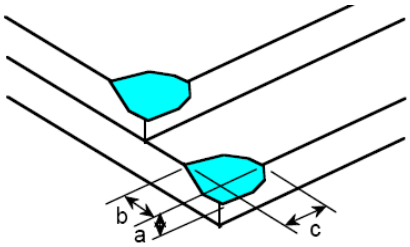
</td><td><table><tr><th>Length and Width</th><th>Acc. Qty</th></tr><tr><td>c < 3.0, b< 3.0</td><td>Ignore</td></tr><tr><td colspan="2">a<Glass Thickness</td></tr></table></td></tr>
<tr><td>09</td><td>Glass Burr:
(Minor defect)
 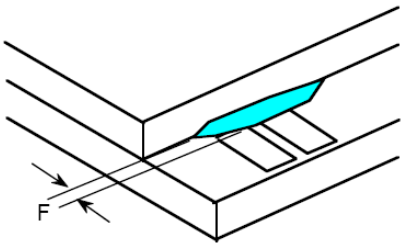

 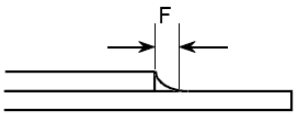

 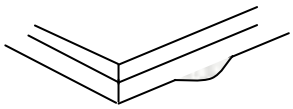 </td><td><table><tr><th>Length</th><th>Acc. Qty</th></tr><tr><td>F < 1.0</td><td>Ignore</td></tr></table>
Glass burr don’t affect assemble and module dimension.</td></tr>
</table>

<table>
<tr><td>10</td><td>FPC Defect:
(Minor defect)
 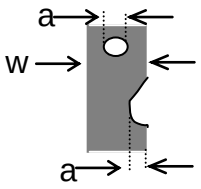
</td><td>10.1 Dent, pinhole width a<w/3.
(w: circuitry width.)
10.2 Open circuit is unacceptable.
10.3 No oxidation, contamination and distortion.</td></tr>
<tr><td>11</td><td>Bubble on Polarizer
(Minor defect)</td><td><table><tr><th>Diameter</th><th>Acc. Qty</th></tr><tr><td>φ≤0.30</td><td>Ignore</td></tr><tr><td>0.30 <φ≤0.50</td><td>N≤2</td></tr><tr><td>0.50 < φ</td><td>N=0</td></tr></table></td></tr>
<tr><td>12</td><td>Dent on Polarizer
(Minor defect)</td><td><table><tr><th>Diameter</th><th>Acc. Qty</th></tr><tr><td>φ≤0.25</td><td>Ignore</td></tr><tr><td>0.25 <φ≤0.50</td><td>N≤4</td></tr><tr><td>0.50 < φ</td><td>None</td></tr></table></td></tr>
<tr><td>13</td><td>Bezel</td><td>13.1 No rust, distortion on the Bezel.
13.2 No visible fingerprints, stains or other contamination.</td></tr>
<tr><td>14</td><td>Touch Panel</td><td>D: Diameter W: width L: length
14.1 Spot: D<0.25 is acceptable
0.25≤D≤0.4
2dots are acceptable and the distance between defects should more than 10 mm.
D>0.4 is unacceptable
14.2 Dent: D>0.40 is unacceptable
14.3 Scratch: W≤0.03, L≤10 is acceptable,
0.03<W≤0.10, L≤10 is acceptable
Distance between 2 defects should more than 10 mm.
W>0.10 is unacceptable.</td></tr>
<tr><td>15</td><td>LCD Ripple</td><td>Touch the touch panel, cannot see the LCD ripple.
Pen: R 0.8mm silicon rubber.
Operation Force:120g</td></tr>
<tr><td>16</td><td>PCB</td><td>16.1 No distortion or contamination on PCB terminals.
16.2 All components on PCB must same as documented on the BOM/component layout.</td></tr>
</table>

		16.3 Follow IPC-A-600F.
17	Soldering	Follow IPC-A-610C standard
18	Electrical Defect (Major defect)	The below defects must be rejected. 18.1 Missing vertical / horizontal segment, 18.2 Abnormal Display. 18.3 No function or no display. 18.4 Current exceeds product specifications. 18.5 LCD viewing angle defect. 18.6 No Backlight. 18.7 Dark Backlight. 18.8 Touch Panel no function.

Remark: LCD Panel Broken shall be rejected. Defect out of LCD viewing area is acceptable.

10.7. Classification of Defects

10.7.1. Visual defects (Except no / wrong label) are treated as minor defect and electrical defect is major.

10.7.2. Two minor defects are equal to one major in lot sampling inspection.

10.8. Identification/marking criteria

Any unit with illegible / wrong /double or no marking/ label shall be rejected.

10.9. Packing

10.9.1. There should be no damage of the outside carton box, each packaging box should have one identical label.

10.9.2. Modules inside package box should have compliant mark.

10.9.3. All direct package materials shall offer ESD protection.

Note1: Bright dot is defined as the defective area of the dot is larger than 50% of one sub-pixel area.

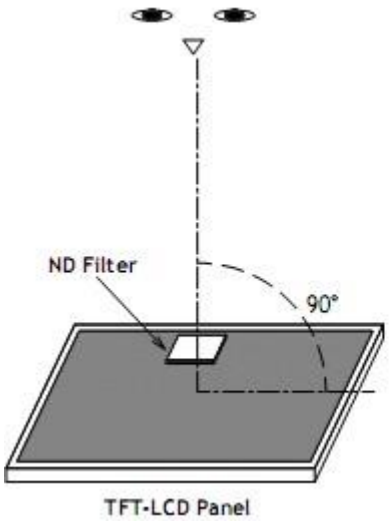

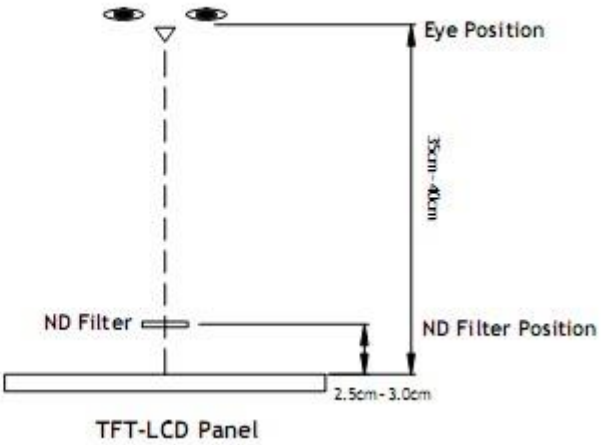

Bright dot: The bright dot size defect at black display pattern. It can be recognized by 2% transparency of

filter when the distance between eyes and panel is 350mm±50mm.
Dark dot: Cyan, Magenta or Yellow dot size defect at white display pattern. It can be recognized by 5% transparency of filter when the distance between eyes and panel is 350mm±50mm.
Note2: Mura on display which appears darker / brighter against background brightness on parts of display area.

11. Reliability Specification

No	Item	Condition	Quantity	Criteria
1	High Temperature Operating	85℃, 120Hrs	2	GB/T2423.2 -2008
2	Low Temperature Operating	-30℃, 120Hrs	2	GB/T2423.1 -2008
3	High Humidity	60℃， 90%RH , 120Hrs	2	GB/T2423.3 -2006
4	High Temperature Storage	85℃, 120Hrs	2	GB/T2423.2 -2008
5	Low Temperature Storage	-30℃, 120Hrs	2	GB/T2423.1 -2008
6	Thermal Cycling Test	-20℃, 60min~70℃, 60min, 20 cycles.	2	GB/T2423.22 -2012
7	Packing vibration	Frequency range:10Hz~50Hz Acceleration of gravity:5G X,Y,Z 30 min for each direction.	2	GB/T5170.14 -2009
8	Electrical Static Discharge	Air:±4KV 150pF/330Ω 5 times	2	GB/T17626.2 -2006
		Contact:±2KV 150pF/330Ω 5 times		
9	Drop Test (Packaged)	Height:80 cm,1 corner, 3 edges, 6 surfaces.	2	GB/T2423.8 -1995

Note1. After the reliability test, the product only guarantee function normally without any fatal defect (non-display, line defect, abnormal display). All the cosmetic specification is judged before the reliability test.
Note2. Total current Consumption should be below double of initial value.
Note3. One product only can borne one item of reliability test. Can not take same single one product to do different reliability test .
Note4. All adjustment of display are performed after temperature of product back to room temperature and under static situation for 2 hrs.
Note5. Under no condensation of dew

12. Precautions and Warranty

12.1. Safety

12.1.1. The liquid crystal in the LCD is poisonous. Do not put it in your mouth. If the liquid crystal touches your skin or clothes, wash it off immediately using soap and water.

12.1.2. Since the liquid crystal cells are made of glass, do not apply strong impact on them. Handle with care.

12.2. Handling

12.2.1. Reverse and use within ratings in order to keep performance and prevent damage.

12.2.2. Do not wipe the polarizer with dry cloth, as it might cause scratch. If the surface of the LCD needs to be cleaned, wipe it swiftly with cotton or other soft cloth soaked with petroleum IPA, do not use other chemicals.

12.3. Storage

12.3.1. Do not store the LCD module beyond the specified temperature ranges.

12.3.2. Strong light exposure causes degradation of polarizer and color filter

12.4. Metal Pin (Apply to Products with Metal Pins)

12.4.1. Pins of LCD and Backlight

13.4.1.1 Solder tip can touch and press on the tip of Pin LEAD during the soldering

13.4.1.2 Recommended Soldering Conditions

Solder Type: Sn96.3~94-Ag3.3~4.3-Cu0.4~1.1

Maximum Solder Temperature: 370℃

Maximum Solder Time: 3s at the maximum temperature

Recommended Soldering Temp: 350±20℃

Typical Soldering Time: ≤3s

13.4.1.3 Solder Wetting

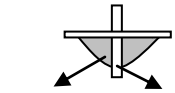

Recommended

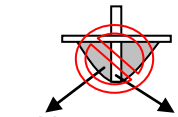

Not Recommended

12.4.2. Pins of EL

13.4.2.1 Solder tip can touch and press on the tip of EL leads during soldering.

13.4.2.2 No Solder Paste on the soldering pad on the motherboard is recommended.

13.4.2.3 Recommended Soldering Conditions

Solder type: Nippon Alimit Leadfree SR-34, size 0.5mm

Recommended Solder Temperature: 270～290℃

Typical Soldering Time: ≤2s

Minimum solder distance from EL lamp (body):2.0mm

13.4.2.4 No horizontal press on the EL leads during soldering.

13.4.2.5 180° bend EL leads three times is not allowed.

13.4.2.6 Solder Wetting

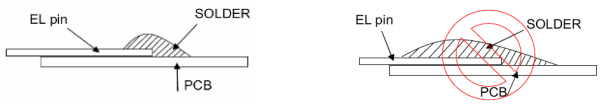

Recommended Not Recommended

13.4.2.7 The type of the solder iron:

Recommended Not Recommended

13.4.2.8 Solder Pad

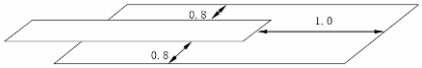

12.5. Operation

12.5.1. Do not drive LCD with DC voltage

12.5.2. Response time will increase below lower temperature

12.5.3. Display may change color with different temperature

12.5.4. Mechanical disturbance during operation, such as pressing on the display area, may cause the segments to appear “fractured”.

12.5.5. Do not connect or disconnect the LCM to or from the system when power is on.

12.5.6. Never use the LCM under abnormal condition of high temperature and high humidity.

12.5.7. Module has high frequency circuits. Sufficient suppression to the electromagnetic interface shall be done by system manufacturers. Grounding and shielding methods may be important to minimize the interference.

12.5.8. Do not display the fixed pattern for long time（we suggest the duration time not longer than half an hour）because it may develop image sticking due to the TFT structure.

12.6. Static Electricity

12.6.1. CMOS LSIs are equipped in this unit, so care must be taken to avoid the electro-static charge, by ground human body, etc.

12.6.2. The normal static prevention measures should be observed for work clothes and benches.

12.6.3. The module should be kept into anti-static bags or other containers resistant to static for storage.

12.7. Limited Warranty

12.7.1. Our warranty liability is limited to repair and/or replacement. We will not be responsible for any consequential loss.

12.7.2. If possible, we suggest customer to use up all modules in six months. If the module storage time over twelve months, we suggest that recheck it before the module be used.

12.7.3. After the product shipped, any product quality issues must be feedback within three months, otherwise, we will not be responsible for the subsequent or consequential events.

13. Packaging

TBD